EG4® 280Ah WALLMOUNT AW CONDUIT BOX

QUICK-START GUIDE

©2025 EG4® ELECTRONICS, LLC. ALL RIGHTS RESERVED.
VERSION 1.0.2 | INFORMATION SUBJECT TO CHANGE WITHOUT NOTICE.
MODEL #: EC-WM-LL-AW

TABLE OF CONTENTS

1. SAFETY 1
   1.1 SAFETY INSTRUCTIONS 1
   1.2 IMPORTANT SAFETY NOTIFICATIONS 1
2. SÉCURITÉ DE LA BATTERIE 3
   2.1 CONSIGNES DE SÉCURITÉ 3
   2.2 NOTIFICATIONS DE SÉCURITÉ IMPORTANTES 3
3. BRIEF DESCRIPTION 5
4. PACKING LIST 5
5. CONDUIT BOX DIMENSIONS 6
   5.1 EXTERIOR DIMENSIONS 6
   5.2 LEFT & RIGHT-SIDE PANEL 7
   5.3 TOP PANEL 7
6. CONDUIT BOX GENERAL INSTALLATION 9
   6.1 WITH EG4® WALLMOUNT 280AH AW 10
   6.2 X-BRACKET OVERVIEW 12
   6.3 WITH EG4® 18KPV INVERTER 13
   6.4 WITH EG4® 12KPV INVERTER 17
7. CHANGELOG 21

1. SAFETY

1.1 SAFETY INSTRUCTIONS

International safety regulations have been strictly observed in the design and testing of the equipment. Before beginning any work, carefully read all safety instructions, and always observe them when working on or with the ESS. The installation must follow all applicable national or local standards and regulations.

Incorrect installation may cause:

- Injury or death to the installer, operator or third party
- Damage to the inverter or other attached equipment

1.2 IMPORTANT SAFETY NOTIFICATIONS

DANGER: ***Hazardous Voltage Circuits!***

There are various safety concerns that must be carefully observed before, during, and after the installation, as well as during future operation and maintenance. The following are important safety notifications for the installer and any end users of this product under normal operating conditions.

1. **Beware of high PV voltage.** Install an external DC disconnect switch or breaker and ensure it is in the “off” or “open” position before installing or working on the inverter. Use a voltmeter to confirm there is no DC voltage present to avoid electric shock.
2. **Beware of high grid voltage.** Ensure the AC switch and/or AC breaker are in the “off” or “open” position before installing or working on the inverter. Use a voltmeter to confirm there is no voltage present to avoid electric shock.
3. **Beware of high battery current.** Ensure that the battery module breakers and/or on/off switches are in the “open” or “off” position before installing or working on the inverter. Use a voltmeter to confirm there is no DC voltage present to avoid electric shock.
4. **Do not** open the inverter while it is operating to avoid electric shock and damage from live voltage and current within the system.
5. **Do not** make any connections or disconnections (PV, battery, grid, communication, etc.) while the system is operating.
6. An installer should make sure to be well protected by reasonable and professional insulative equipment [e.g., personal protective equipment (PPE)].
7. Before installing, operating, or maintaining the system, it is important to inspect all existing wiring to ensure that it meets the appropriate specifications and conditions for use.
8. Ensure that the PV, battery, and grid connections to the system are secure and proper to prevent damage or injuries caused by improper installation.
9. Some components of the system can be very heavy. Be sure to utilize team-lift among other safe lifting techniques throughout the installation.

WARNING: *TO REDUCE THE RISK OF INJURY, READ ALL INSTRUCTIONS!*

All work on this product (system design, installation, operation, setting, configuration, and maintenance) must be carried out by qualified personnel. To reduce the risk of electric shock, do not perform any servicing other than those specified in the operating instructions unless qualified to do so.

10. Read all instructions before installing. For electrical work, follow all local and national wiring standards, regulations, and these installation instructions.
11. Make sure the system is properly grounded. All wiring should be in accordance with the National Electrical Code (NEC), ANSI/NFPA 70.
12. The system can inter-connect with the utility grid only if the utility provider permits. Consult with the local AHJ (Authority Having Jurisdiction) before installing this product for any additional regulations and requirements for the immediate area.
13. All warning labels and nameplates on the system should be clearly visible and must not be removed or covered.
14. **Keep children** from touching or misusing the inverter and relevant systems.
15. **Beware!** Some parts of the system can be hot when in use. Do not touch the inverter's surface or most of the parts when they are operating. During operation, only the LCD and buttons should be touched.

WARNING!

Cancer and Reproductive Harm – See www.P65Warnings.ca.gov for more details.

DISCLAIMER

EG4 reserves the right to make changes to the material herein at any time without notice.
Please refer to www.eg4electronics.com for the most updated version of our manuals/spec sheets.

2. SÉCURITÉ DE LA BATTERIE

2.1 CONSIGNES DE SÉCURITÉ

Avant de commencer tout travail, lisez attentivement toutes les consignes de sécurité et respectez-les toujours lorsque vous travaillez sur ou avec la batterie. L'installation doit être conforme à toutes les normes et réglementations nationales ou locales applicables. Consultez l'autorité compétente locale et/ou le service public pour obtenir les permis et les autorisations appropriés avant l'installation.

Une installation incorrecte peut entraîner les effets suivants :

- Blessure ou décès de l'installateur, de l'exploitant ou d'un tiers
- Dommages à la batterie ou à tout autre équipement attaché

2.2 NOTIFICATIONS DE SÉCURITÉ IMPORTANTES

DANGER: Circuits à haute tension!

Il existe divers problèmes de sécurité qui doivent être soigneusement observés avant, pendant et après l'installation, ainsi que lors de l'utilisation et de la maintenance futures. Ce qui suit sont des notifications de sécurité importantes pour l'installateur et tout utilisateur final de ce produit dans des conditions de fonctionnement normales.

1. **Ne démontez pas la batterie.** Contactez le distributeur pour tout problème nécessitant une réparation pour plus d'informations et des instructions de manipulation appropriées. Un entretien ou un remontage incorrect peut entraîner un risque d'électrocution ou d'incendie et annuler la garantie.
2. **Ne court-circuitez jamais les entrées CC.** Un court-circuit de la batterie peut entraîner un risque d'électrocution ou d'incendie et peut entraîner des blessures graves ou la mort et/ou des dommages permanents à l'appareil et/ou à tout équipement connecté.
3. **Soyez prudent lorsque vous travaillez avec des outils métalliques sur ou à proximité des batteries et des systèmes. Le risque** d'arcs électriques et/ou de court-circuit de l'équipement peut entraîner des blessures graves ou la mort et des dommages à l'équipement.
4. **Attention au courant de batterie élevé.** Assurez-vous que les disjoncteurs du module de batterie et/ou les interrupteurs marche/arrêt sont en position « ouvert » ou « arrêt » avant d'installer ou de travailler sur la batterie. Utilisez un voltmètre pour confirmer qu'il n'y a pas de tension présente afin d'éviter les chocs électriques.
5. **N'effectuez aucune connexion ou déconnexion du système pendant que les batteries fonctionnent.** Des dommages aux composants du système ou un risque d'électrocution peuvent survenir si vous travaillez avec des batteries sous tension.
6. Assurez-vous que le banc de batteries est correctement mis à la terre.
7. Un installateur doit s'assurer d'être bien protégé par un équipement isolant raisonnable et professionnel [par exemple, un équipement de protection individuelle (EPI)].
8. Avant d'installer, d'utiliser ou d'entretenir le système, il est important d'inspecter tout le câblage existant pour s'assurer qu'il répond aux spécifications et aux conditions d'utilisation appropriées.
9. Assurez-vous que les connexions de la batterie et des composants du système sont sécurisées et appropriées pour éviter les dommages ou les blessures causés par une mauvaise installation.

AVERTISSEMENT : *Pour réduire le risque de blessure, lisez toutes les instructions !*

Tous les travaux sur ce produit (conception du système, installation, fonctionnement, réglage, configuration et maintenance) doivent être effectués par du personnel qualifié. Pour réduire le risque d'électrocution, n'effectuez aucun entretien autre que ceux spécifiés dans le mode d'emploi, à moins d'être qualifié pour le faire.

10. Lisez toutes les instructions avant de commencer l'installation. Pour les travaux électriques, suivez toutes les normes de câblage locales et nationales, les réglementations et ces instructions d'installation. Tout le câblage doit être conforme au Code national de l'électricité (NEC), ANSI/NFPA 70.
11. La batterie et le système ne peuvent se connecter au réseau public que si le fournisseur d'électricité l'autorise. Consultez l'AHJ local avant d'installer ce produit pour connaître les réglementations et exigences supplémentaires de la région.
12. Toutes les étiquettes d'avertissement et les plaques signalétiques de cette batterie doivent être clairement visibles et ne doivent pas être retirées ou couvertes.
13. L'installateur doit tenir compte de la sécurité des futurs utilisateurs lors du choix de la position et de l'emplacement corrects de la batterie, comme spécifié dans ce manuel.
14. Tenez les enfants à l'écart de la batterie et des systèmes concernés ou de les utiliser à mauvais escient.

La batterie est conçue pour arrêter de se charger lorsqu'elle atteint le seuil bas de 23 °F. Si un courant de charge est observé lorsque la température interne de la batterie est inférieure à 23 °F, débranchez immédiatement la batterie et consultez le distributeur.

Cancer et troubles de la reproduction – Voir www.P65Warnings.ca.gov pour plus de détails.

DISCLAIMER

EG4® se réserve le droit de modifier le contenu de ce document à tout moment sans préavis. Veuillez consulter www.eg4electronics.com pour la version la plus récente de nos manuels/fiches techniques.

3. BRIEF DESCRIPTION

The EG4® 280Ah WallMount AW Conduit Box allows users a simple way to protect cables and connections between battery and inverter from the elements. The conduit box is designed to seamlessly integrate with the 280Ah WallMount AW Battery and either the FlexBOSS21, FlexBOSS18, 12kPV or 18kPV Hybrid Inverters. The enclosure also has a lock and key mechanism to prevent unwanted tampering.

NOTE: *This product is **not** compatible with the 280Ah WallMount Indoor battery.*

4. PACKING LIST

The items listed below will arrive with the product shipment:

280Ah WallMount AW Conduit Box
Weight: 16.85 lbs. (7.64kg)

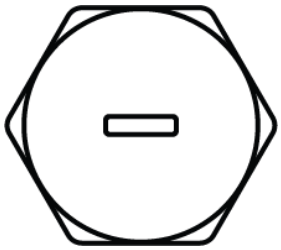

Knockout Plugs	
M63×1.5	Qty 4
M50×1.5	Qty 1
G1	Qty 2
PG21	Qty 2

Keys

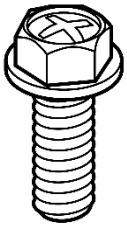

Side Screws x4

5. CONDUIT BOX DIMENSIONS

5.1 EXTERIOR DIMENSIONS

Top View

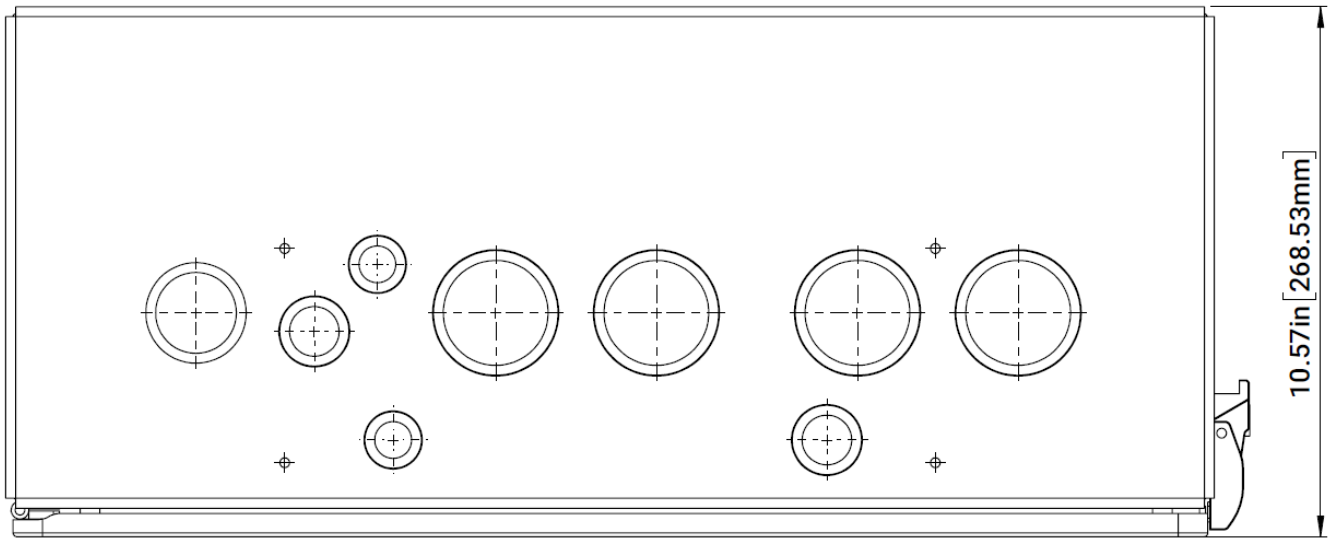

Front View

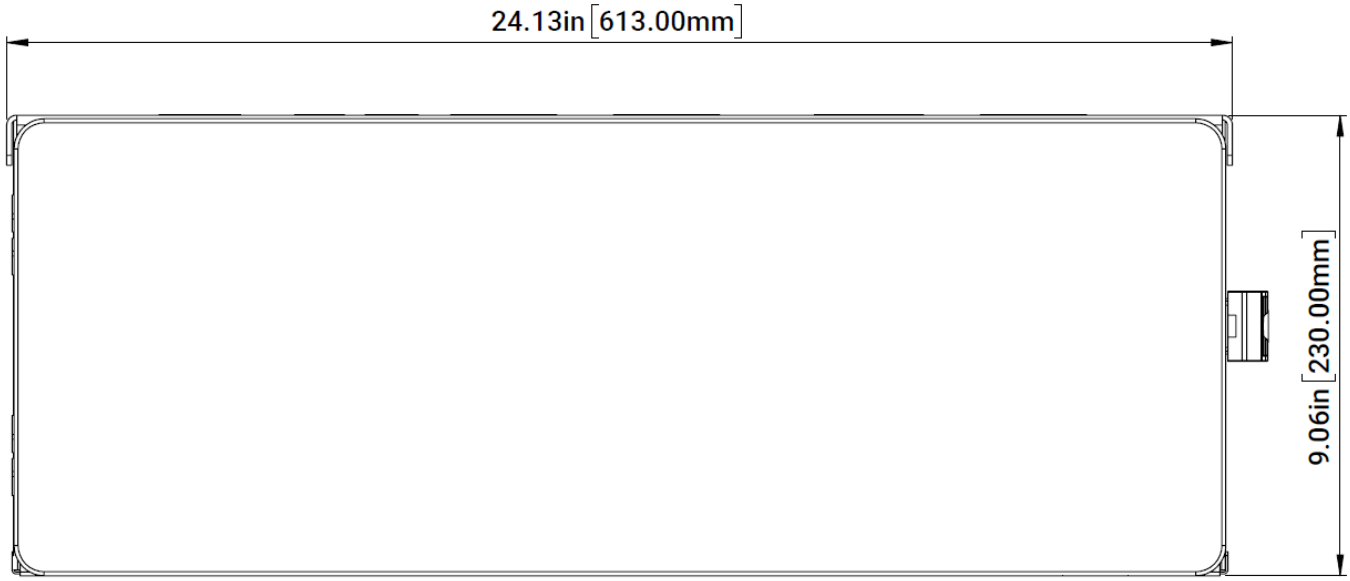

5.2 LEFT & RIGHT-SIDE PANEL

Right Panel

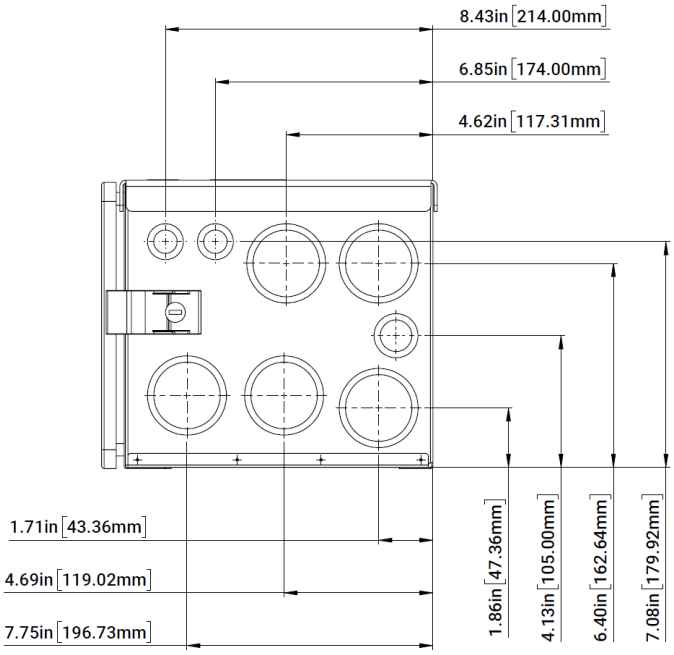

Left Panel

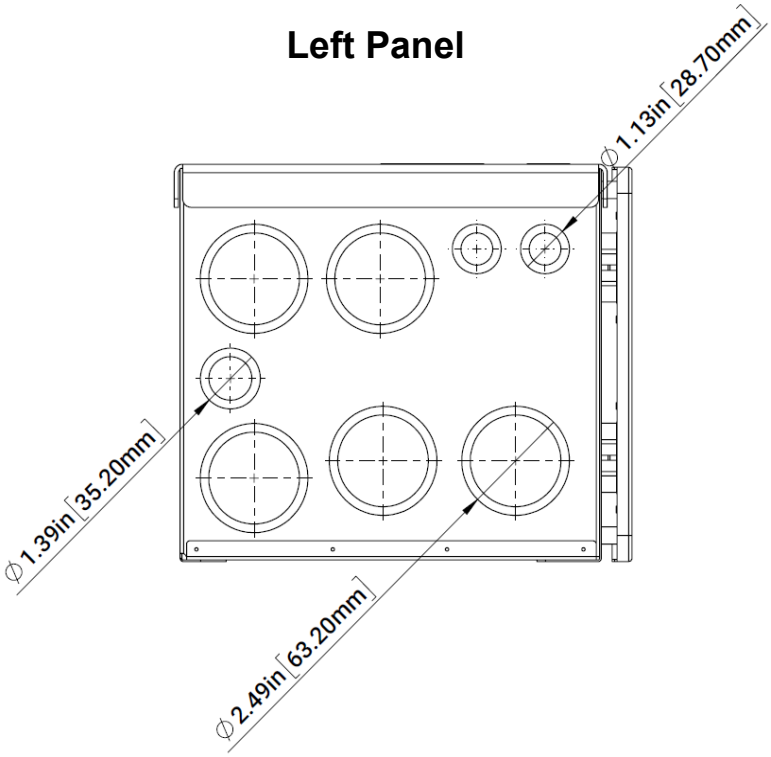

5.3 TOP PANEL

Top Panel

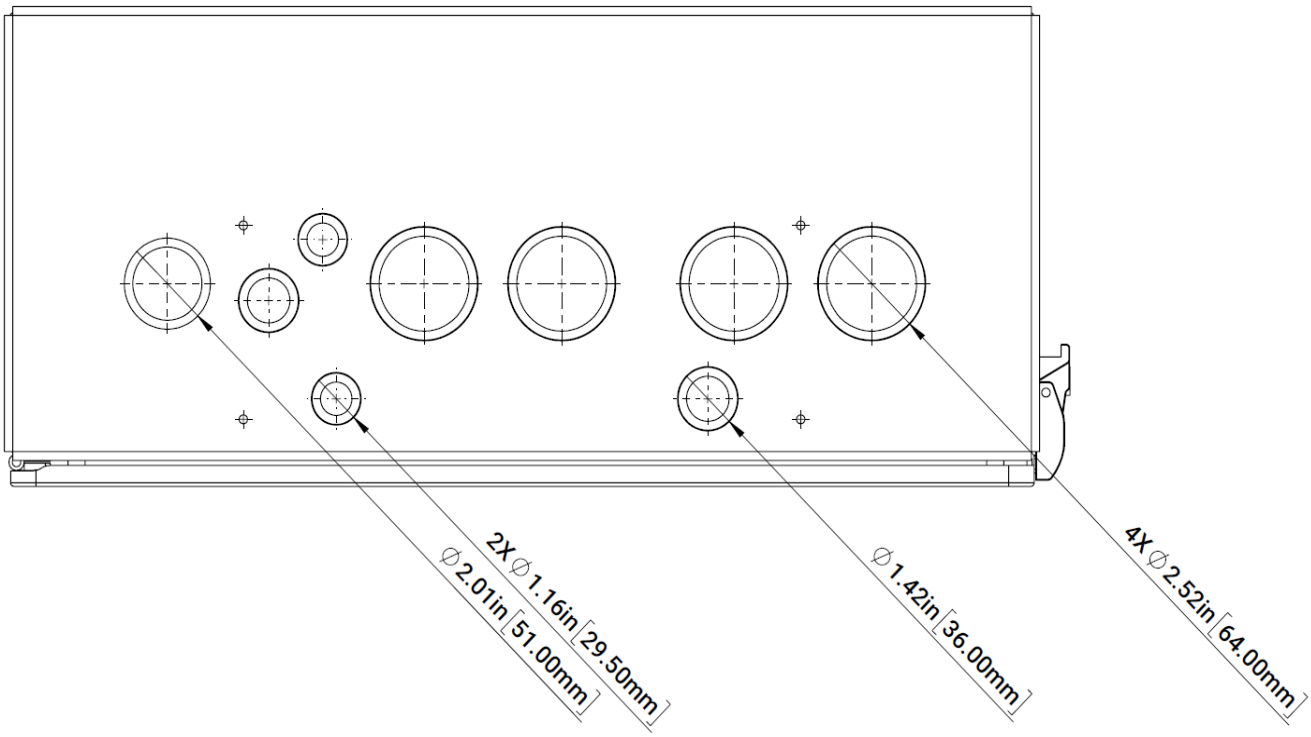

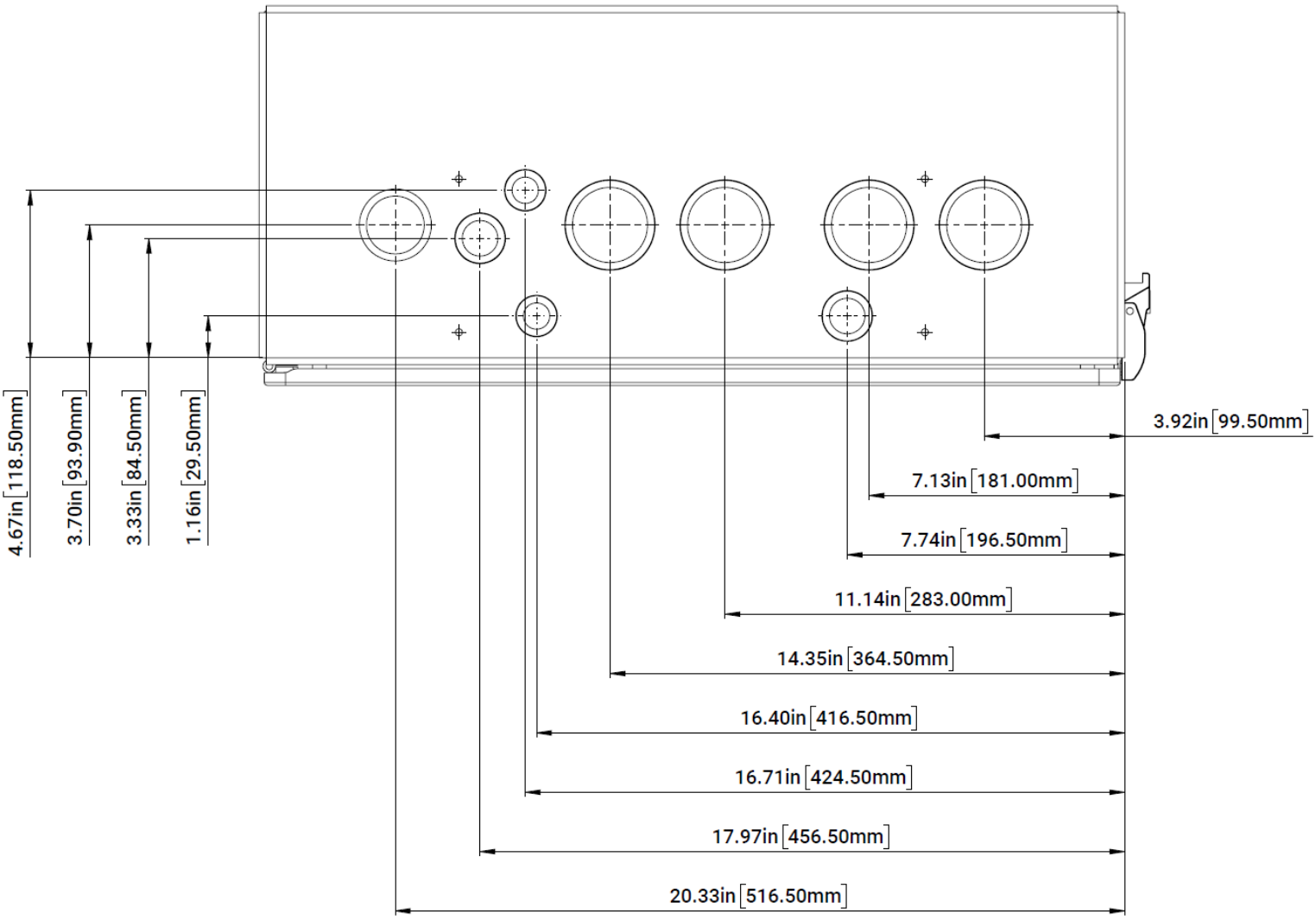

U.S. NOM. TRADE SIZE	ACTUAL KO SIZE
3/4 in.	1.13 – 1.16 in. (28.7 – 29.4 mm)
1 in.	1.39 – 1.42 in. (35.2 – 36.1 mm)
1 1/2 in.	2.01 in. (51 mm)
2 in.	2.49 - 2.52 in. (63.2 – 64 mm)

6. CONDUIT BOX GENERAL INSTALLATION

The conduit box is a highly recommended accessory for the battery to retain all the cables inside an enclosure for added protection and safety. The conduit box houses the wires that are running from the inverter to other external connections.

Step 1 (if applicable): Identify the four screw locations that attach to the All Weather battery on the lower side of the conduit box. **(Figure 1).** Place the conduit box on top of the battery and use the (4) screws provided with the battery to tighten the conduit box to the battery.

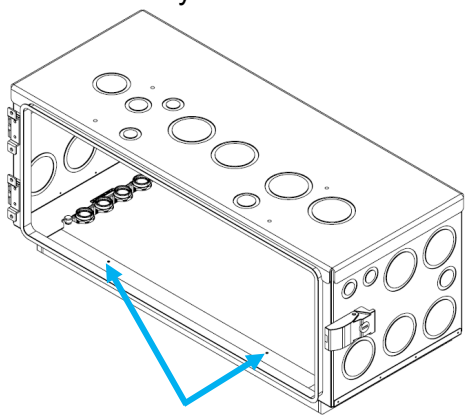

Figure 1 – Screw Install Location

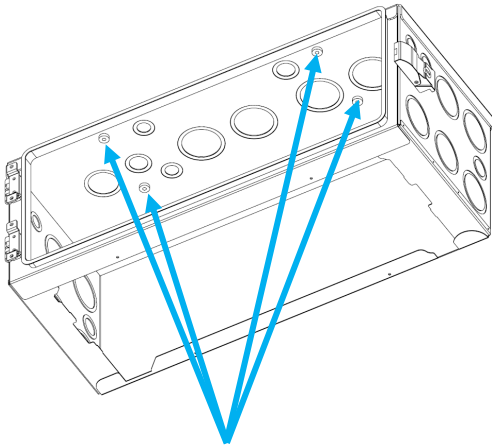

Step 2: If installing the WallMount along with the 12 or 18kPV inverter, please use the 4 threaded inserts on the top side of the conduit box to secure it to the inverter as shown in **Figure 2** (if applicable). The screws needed are included with the 12 or 18kPV.

Figure 2 –Screw Install Location

If installing the WallMount as an additional battery or along with non-EG4 inverter, please use the plugs to cover the top holes on the conduit box. Refer to **Figure 3.**

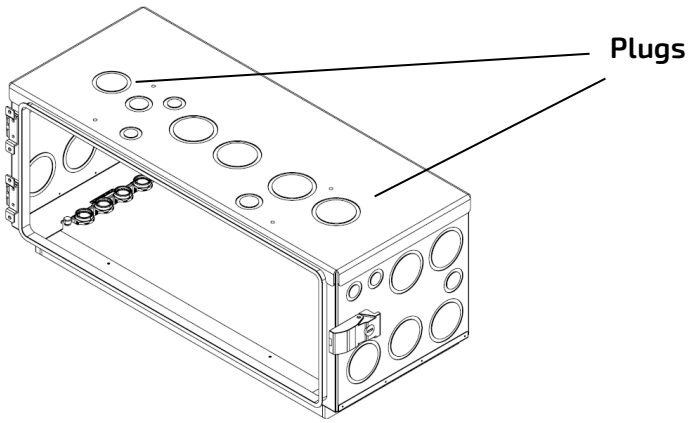

Figure 3 – Conduit Box Plug Location

6.1 WITH EG4® WALLMOUNT 280AH AW

CAUTION: ALWAYS MOUNT THE BATTERY IN AN UPRIGHT POSITION!

Mounting Instructions

1. Place mounting bracket on wall at proper mounting height (top of the bracket a minimum 28.0625 in) from the ground; use a level to make sure the bracket is straight, and mark mounting hole locations. Drill holes to accommodate mounting hardware being used.
   The images below correlate to the steps taken in this list.

Note: *The top of the mounting bracket at 28.0625 in. from the ground makes the battery sit on the ground.*

2. Secure mounting bracket to the wall using the included expansion bolts (concrete/brick walls) or appropriate hardware required for the mounting surface.

Note: *If **not** mounting into concrete or brick using the included expansion bolts, ensure bolts are mounted into both studs or other supportive material. The battery is 300 lbs., please ensure full mounting support.*

3. Attach the WallMount battery pack to the mounting bracket. To accomplish this, lift the battery up and hook the flange on the back of the battery into the flange on the front of the mounting bracket. Secure the battery to the mounting bracket with the 4 included side screws. See Figure 5.

Note: *The battery is very heavy. Please use the team lift technique to prevent damage to personnel and/or equipment*

4. Attach the conduit box (sold separately) to the top of the WallMount battery using the included hardware.
5. Finally, properly ground the battery, attaching a grounding conductor to the M6 grounding screw on top of the battery to the Equipment Grounding System.

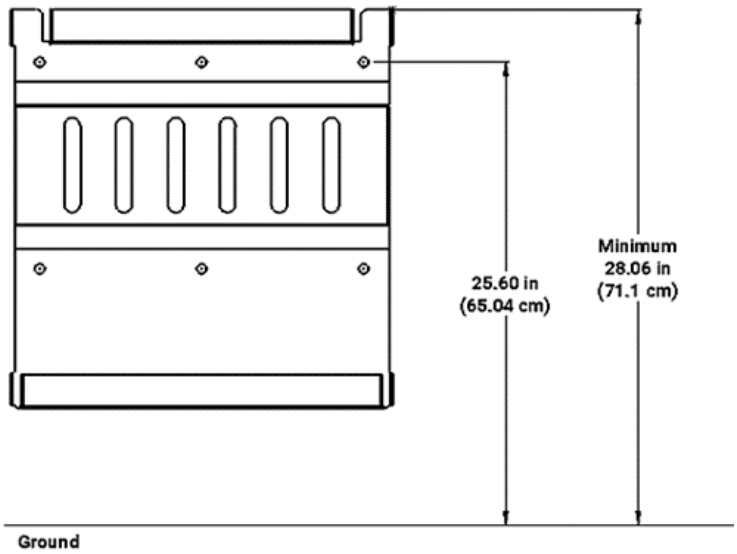

Figure 4 – WallMount Installation with Conduit Box Steps 1 & 2

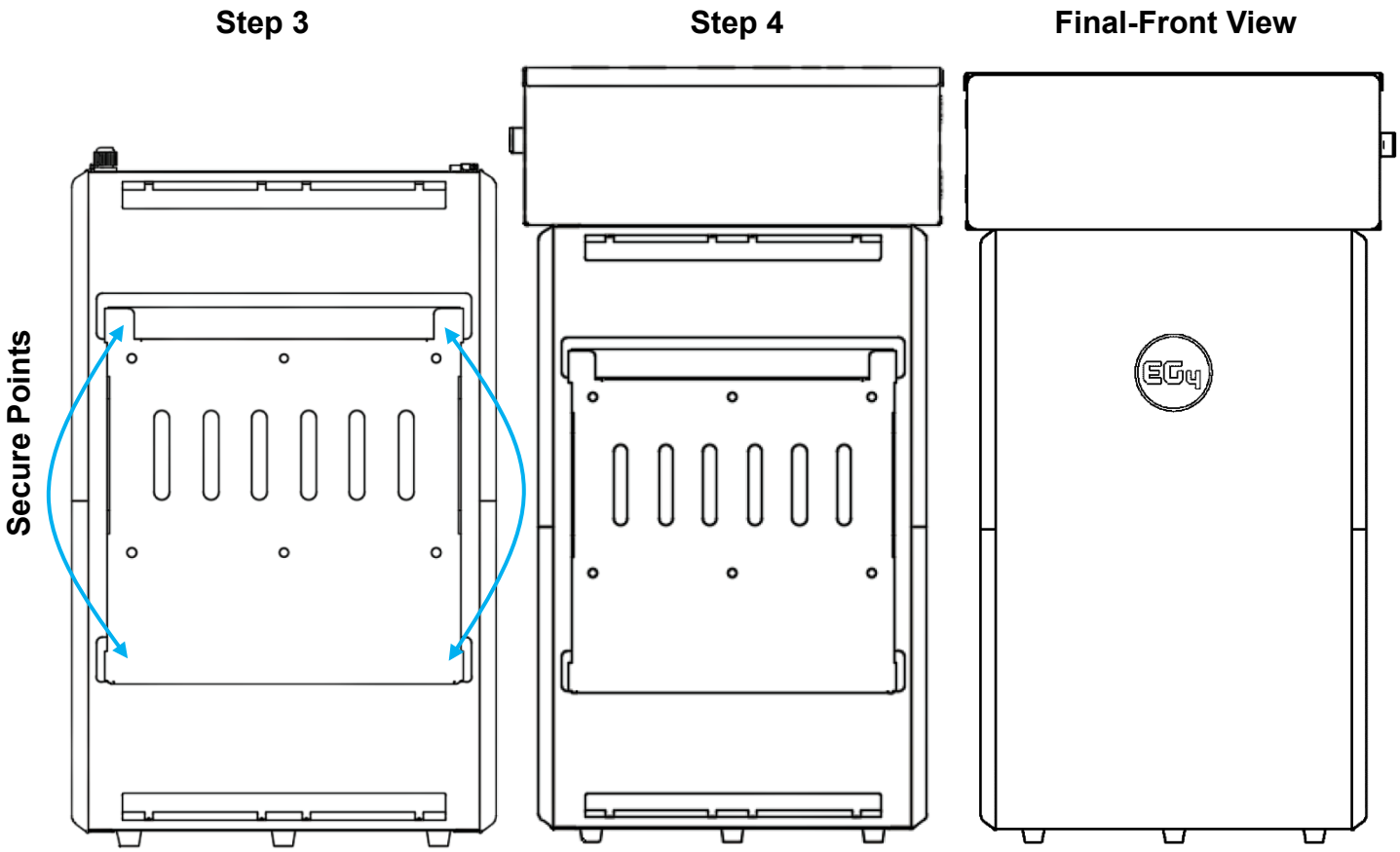

Figure 5 – WallMount Installation with Conduit Box Steps 3, 4 & 5

Scan or select the QR code below to navigate to the EG4® WallMount All Weather 280Ah user manual.

6.2 X-BRACKET OVERVIEW

There are two sets of mounting holes on the x-bracket. The outermost holes in the image below are used for the 18kPV. The innermost holes are for the 12kPV, FlexBOSS18, and FlexBOSS21.

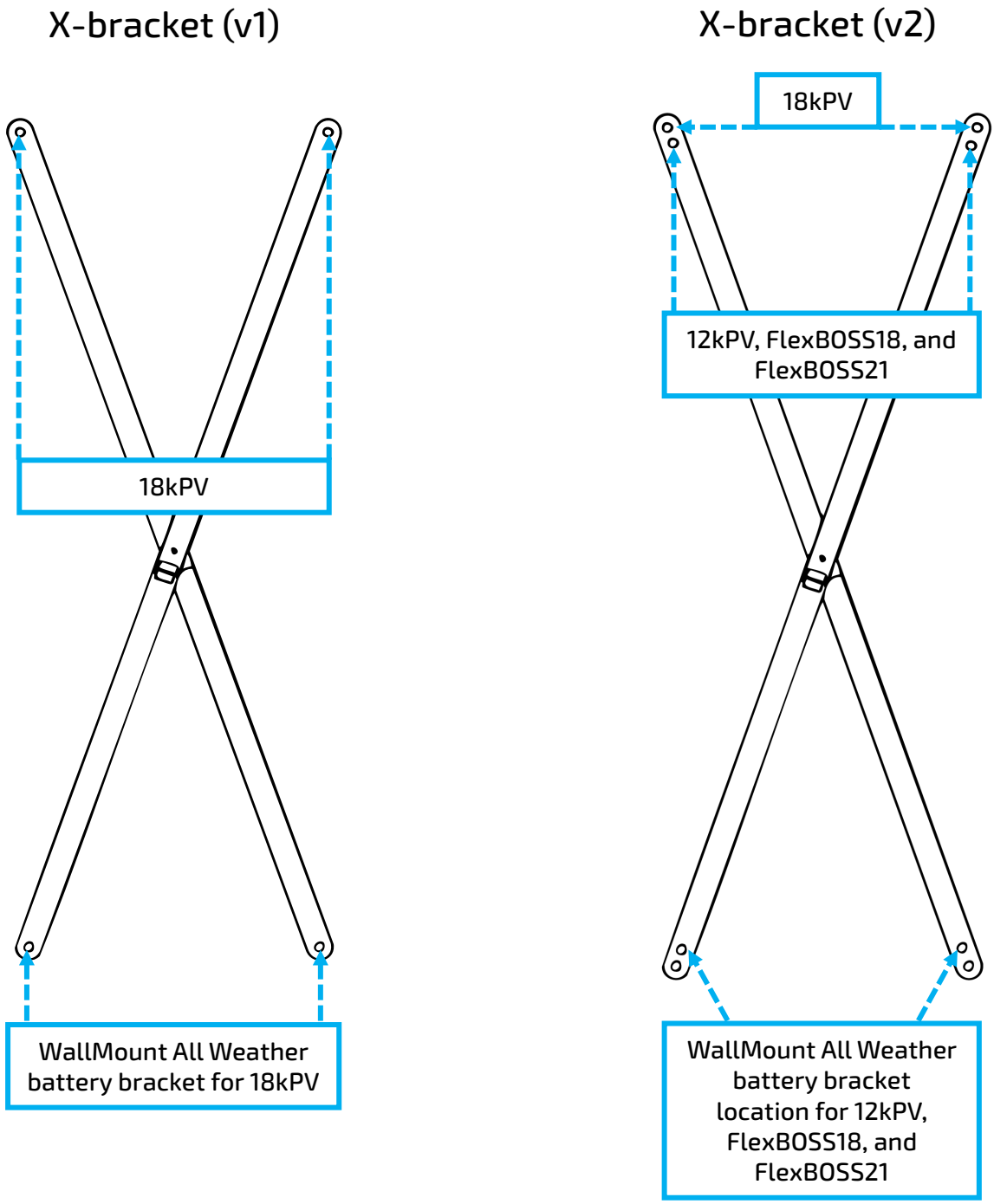

6.3 WITH EG4® 18KPV INVERTER

CAUTION: ALWAYS MOUNT THE BATTERY IN AN UPRIGHT POSITION!

Mounting Instructions with EG4 18kPV (See diagrams on following pages)

Note: *If **not** mounting into concrete or brick using the included expansion bolts, ensure bolts are mounted into both studs or other supportive material. The battery is over 300 lbs., please ensure full mounting support.*

1. Place mounting bracket on wall at proper mounting height (Min. 28.0625 in.) from the ground; use a level to make sure the bracket is straight, and mark mounting hole locations. Drill holes to accommodate mounting hardware being used.
   The images below correlate to the steps taken in this list.

   Note: *The mounting bracket at 28.0625in from the ground makes the battery sit on the ground.*
2. Align the outermost holes on the X-bracket with the holes on the mounting bracket and secure both to the wall, using the included expansion bolts (concrete/brick walls) or appropriate hardware required for the mounting surface. The X-bracket will be behind the mounting plate, against the wall.
3. Using the outermost holes on the X-bracket as a guide, attach the inverter mounting bracket using the appropriate hardware required for the mounting surface.
4. Attach the WallMount battery pack to the mounting bracket. To accomplish this, lift the battery up and hook the flange on the back of the battery into the flange on the front of the mounting bracket. Secure the battery to the mounting bracket with the 4 included side screws.

   Note: *The battery is very heavy. Please use the team lift technique to prevent damage to personnel and/or equipment*
5. Attach the conduit box (sold separately) to the top of the WallMount battery using the included hardware.
6. Attach the 18kPV to the inverter mounting bracket making sure that the holes of the inverter align with the conduit box. Secure the conduit box to the inverter with the included hardware (if applicable).
7. Finally, properly ground the battery, attaching a grounding conductor to the M6 grounding screw on top of the battery to the Equipment Grounding System.

Step 1 (front view)

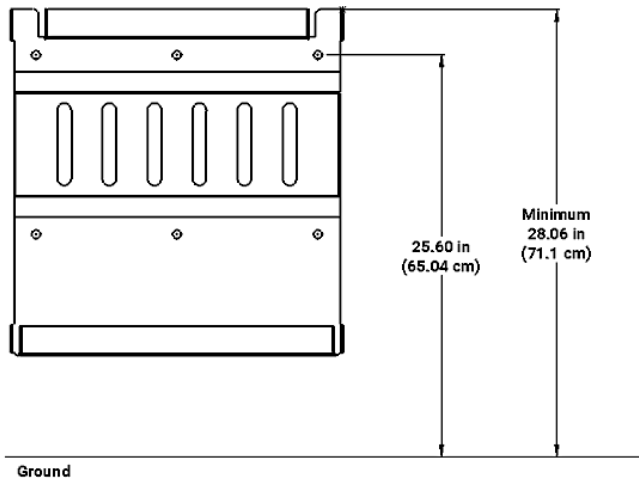

Step 2 (back view)

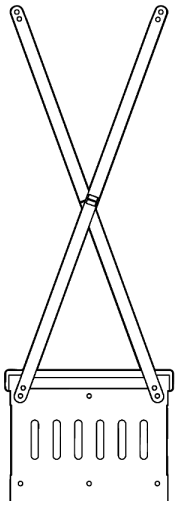

Figure 6 – WallMount Installation with Conduit Box & 18kPV Steps 1 & 2

Step 3 (back view)

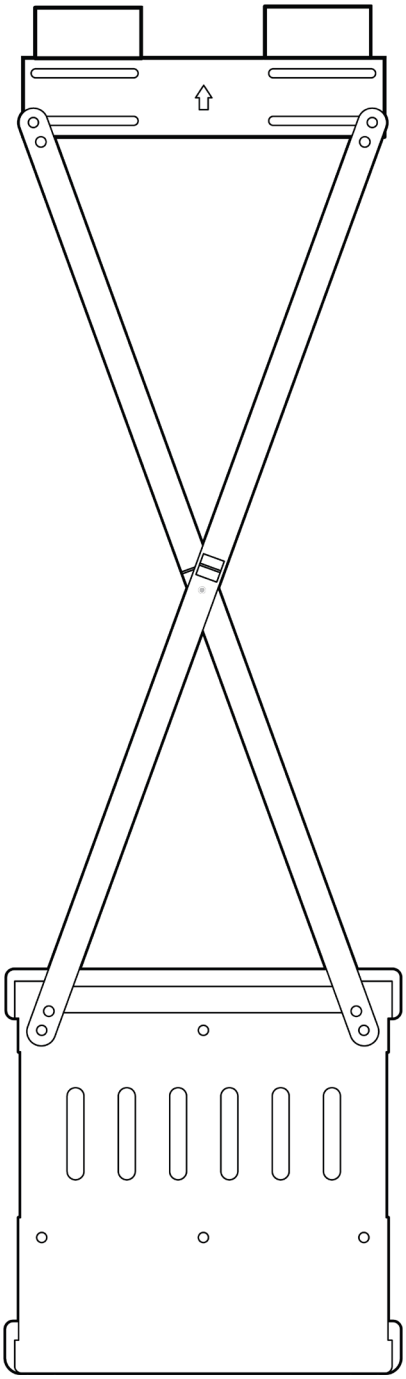

Step 4 (back view)

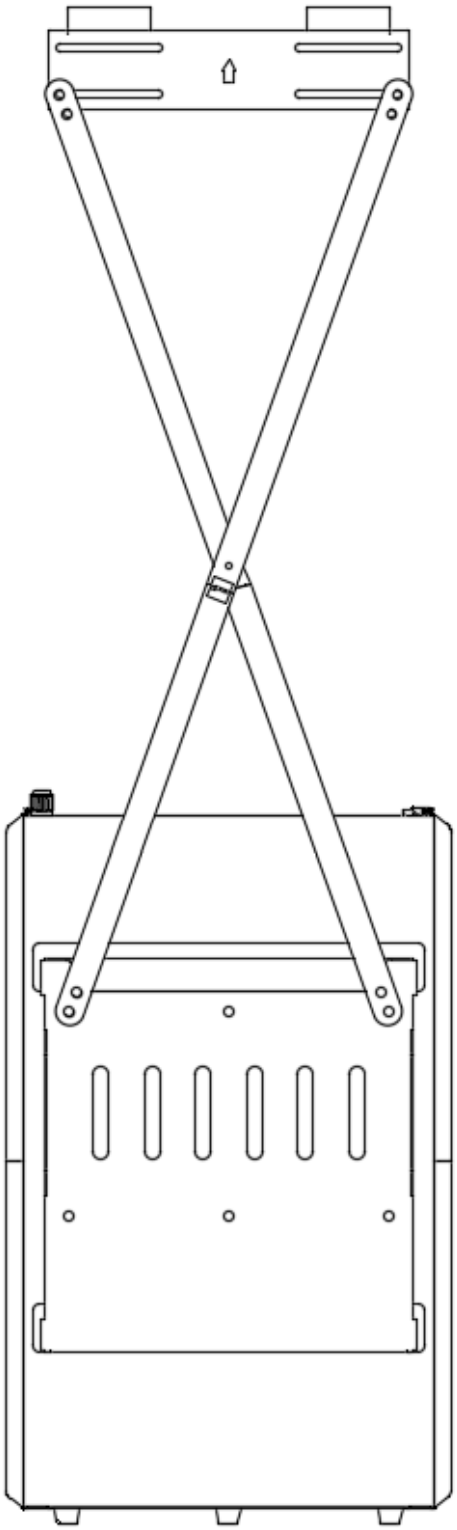

Figure 7 – WallMount Installation with Conduit Box & 18kPV Steps 3 & 4

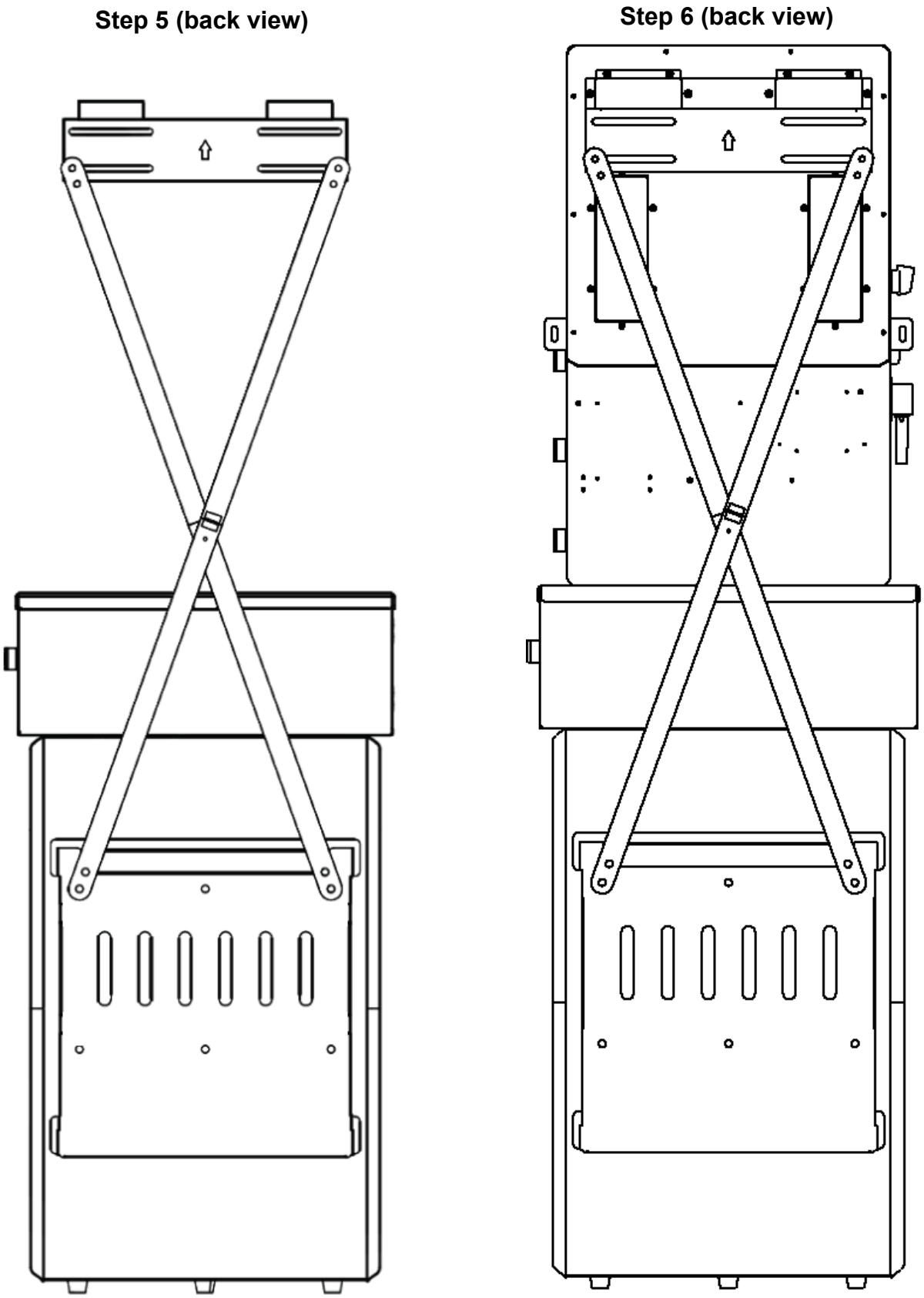

Figure 8 – WallMount Installation with Conduit Box & 18kPV Steps 5 & 6

Final - Front View w/ Dimensions

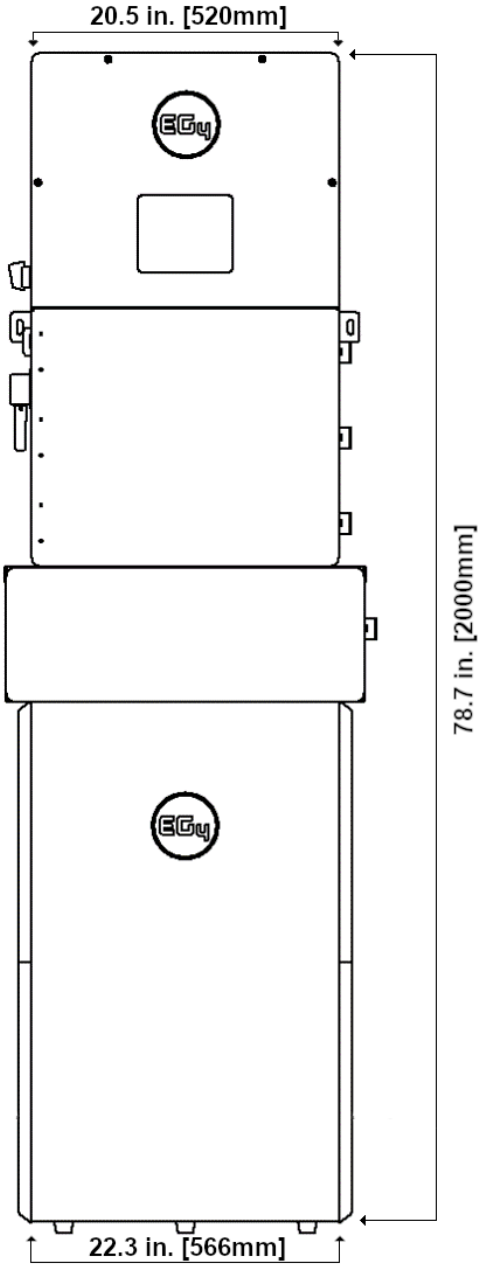

Figure 9 – WallMount Installation with Conduit Box & 18kPV Final

Scan or select the QR code below to navigate to the EG4® 18kPV user manual.

6.4 WITH EG4® 12KPV INVERTER

CAUTION: ALWAYS MOUNT THE BATTERY IN AN UPRIGHT POSITION!

Mounting Instructions with EG4 12kPV (See diagrams on following pages)

Note: *If **not** mounting into concrete or brick using the included expansion bolts, ensure bolts are mounted into both studs or other supportive material. The battery is over 300 lbs., please ensure full mounting support.*

1. Place mounting bracket on wall at proper mounting height (Min. 28.0625 in.) from the ground; use a level to make sure the bracket is straight, and mark mounting hole locations. Drill holes to accommodate mounting hardware being used.
   The images below correlate to the steps taken in this list.

   Note: *The mounting bracket at 28.0625in from the ground makes the battery sit on the ground.*

2. Align the innermost holes on the X-bracket with the holes on the mounting bracket and secure both to the wall, using the included expansion bolts (concrete/brick walls) or appropriate hardware required for the mounting surface. The X-bracket will be behind the mounting plate, against the wall.
3. Using the innermost holes on the X-bracket as a guide, attach the inverter mounting bracket using the appropriate hardware required for the mounting surface.
4. Attach the WallMount battery pack to the mounting bracket. To accomplish this, lift the battery up and hook the flange on the back of the battery into the flange on the front of the mounting bracket. Secure the battery to the mounting bracket with the 4 included side screws.

   Note: *The battery is very heavy. Please use the team lift technique to prevent damage to personnel and/or equipment*

5. Attach the conduit box (sold separately) to the top of the WallMount battery using the included hardware.
6. Attach the 12kPV to the inverter mounting bracket making sure that the holes of the inverter align with the conduit box. Secure the conduit box to the inverter with the included hardware (if applicable).
7. Finally, properly ground the battery, attaching a grounding conductor to the M6 grounding screw on top of the battery to the Equipment Grounding System.

Step 1 (front view)

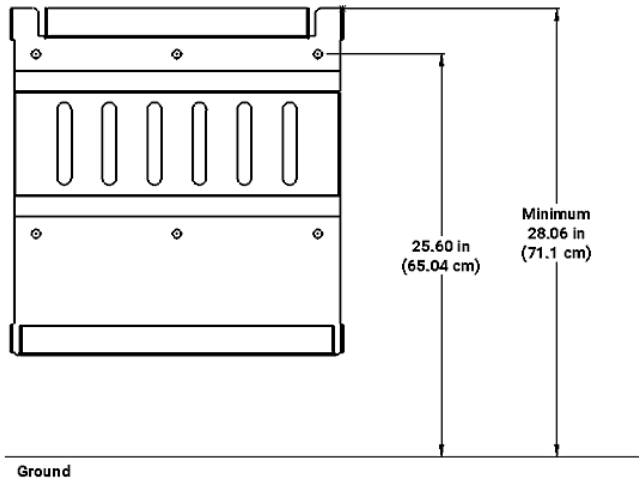

Step 2 (back view)

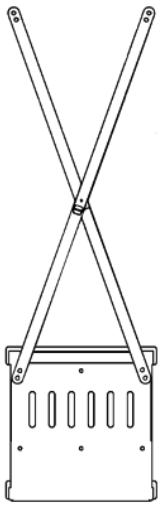

Figure 6 – WallMount Installation with Conduit Box & 12kPV Steps 1 & 2

Step 3 (back view)

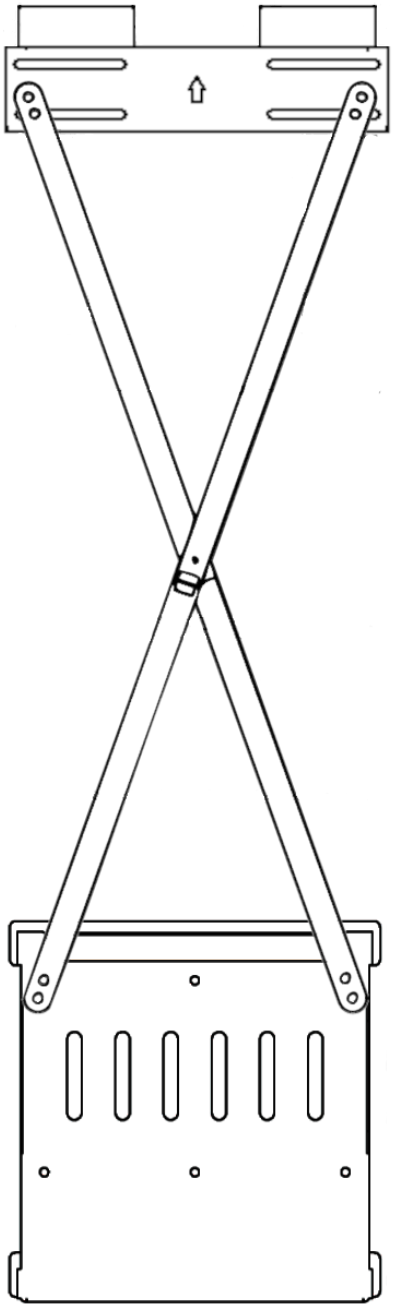

Step 4 (back view)

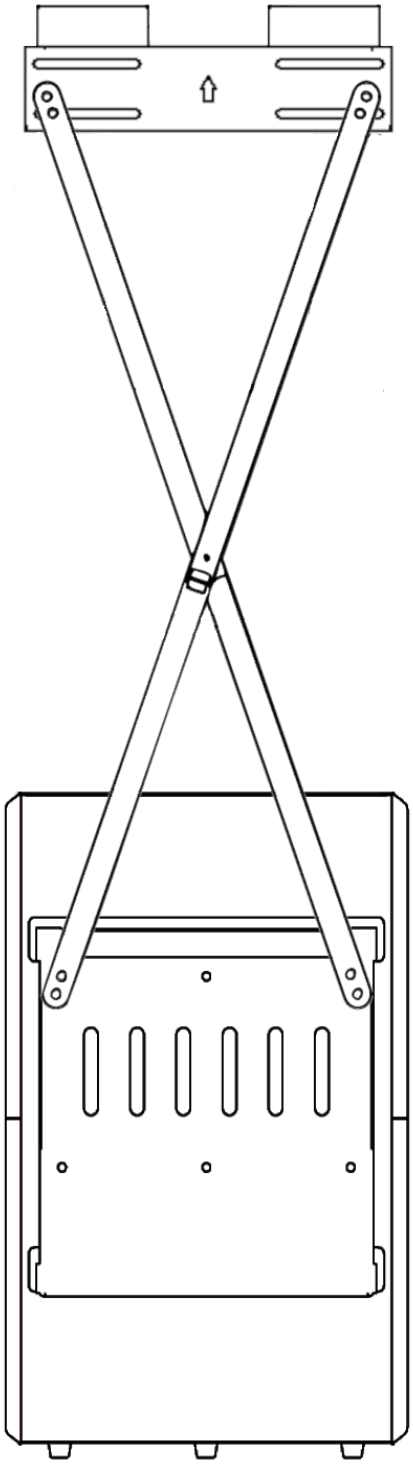

Figure 7 – WallMount Installation with Conduit Box & 12kPV Steps 3 & 4

Step 5 (back view)

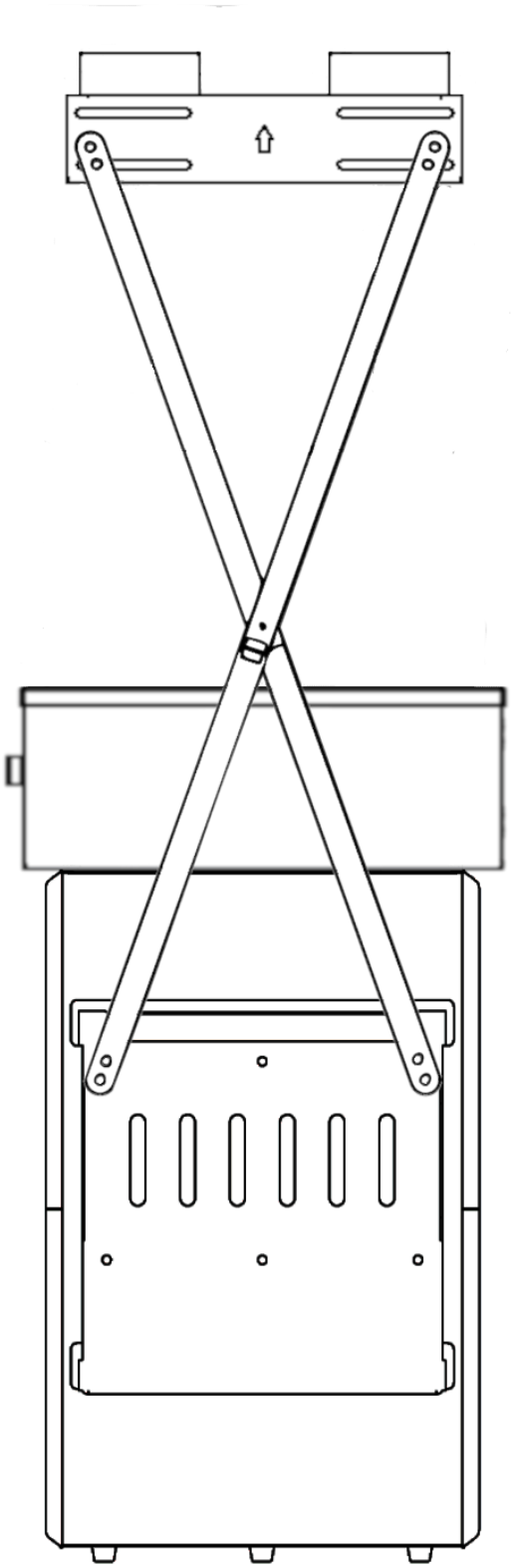

Step 6 (back view)

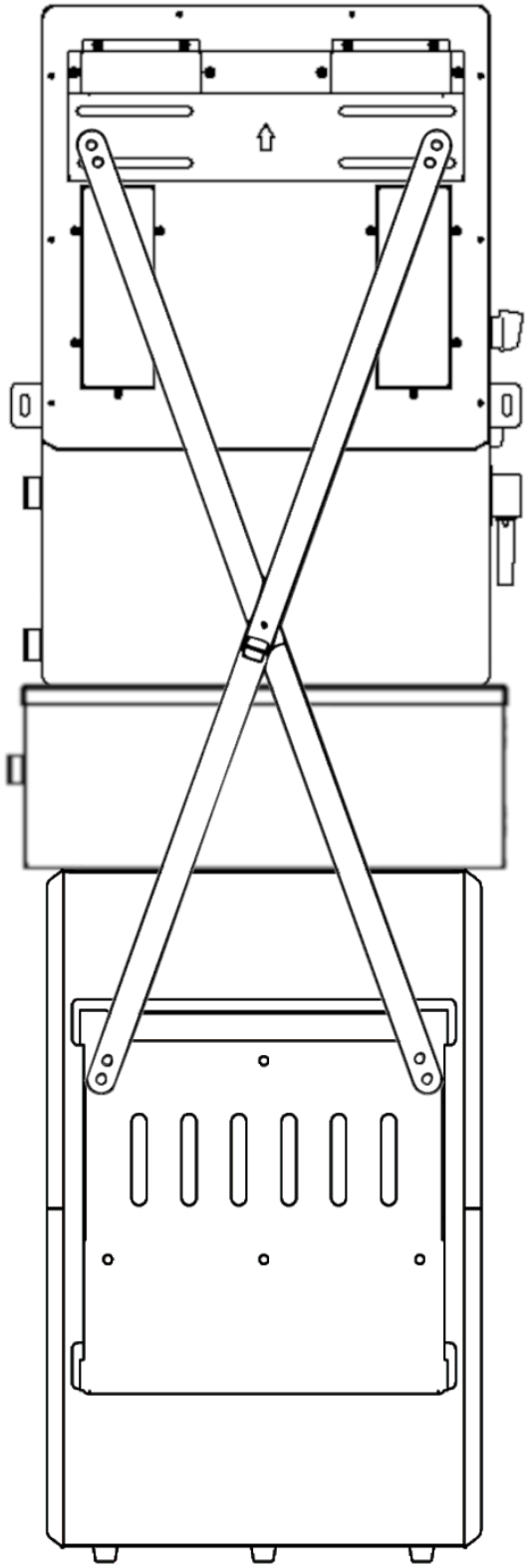

Figure 8 – WallMount Installation with Conduit Box & 12kPV Steps 5 & 6

Final - Front View w/ Dimensions

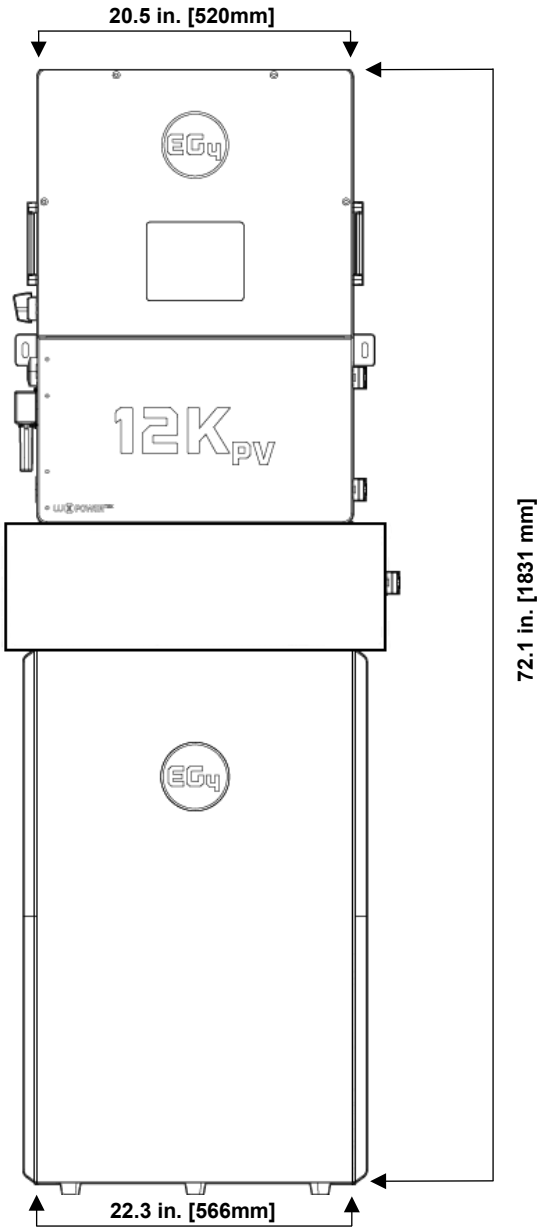

Figure 9 – WallMount Installation with Conduit Box & 12kPV Final

Scan or select the QR code to navigate to the EG4® 12kPV quick-start guide.

Scan or select the QR code below to navigate to the EG4® FlexBOSS21 user manual.

Scan or select the QR code below to navigate to the EG4® FlexBOSS18 user manual.

7. CHANGELOG

V1.0.2

- Added section 6.2 X-Bracket Overview
- Modified images and steps in section 6.3 to show x-bracket v2
- Added section 6.4 to show 12kPV installation with x-bracket v2

V1.0.1

- Added FB21 & FB18 compatibility
- Added FB21 & FB18 QR codes
- Removed grommets from the packing list
- Added French safety section

NOTES

CONTACT US

support@eg4electronics.com
(903) 609-1988
www.eg4electronics.com